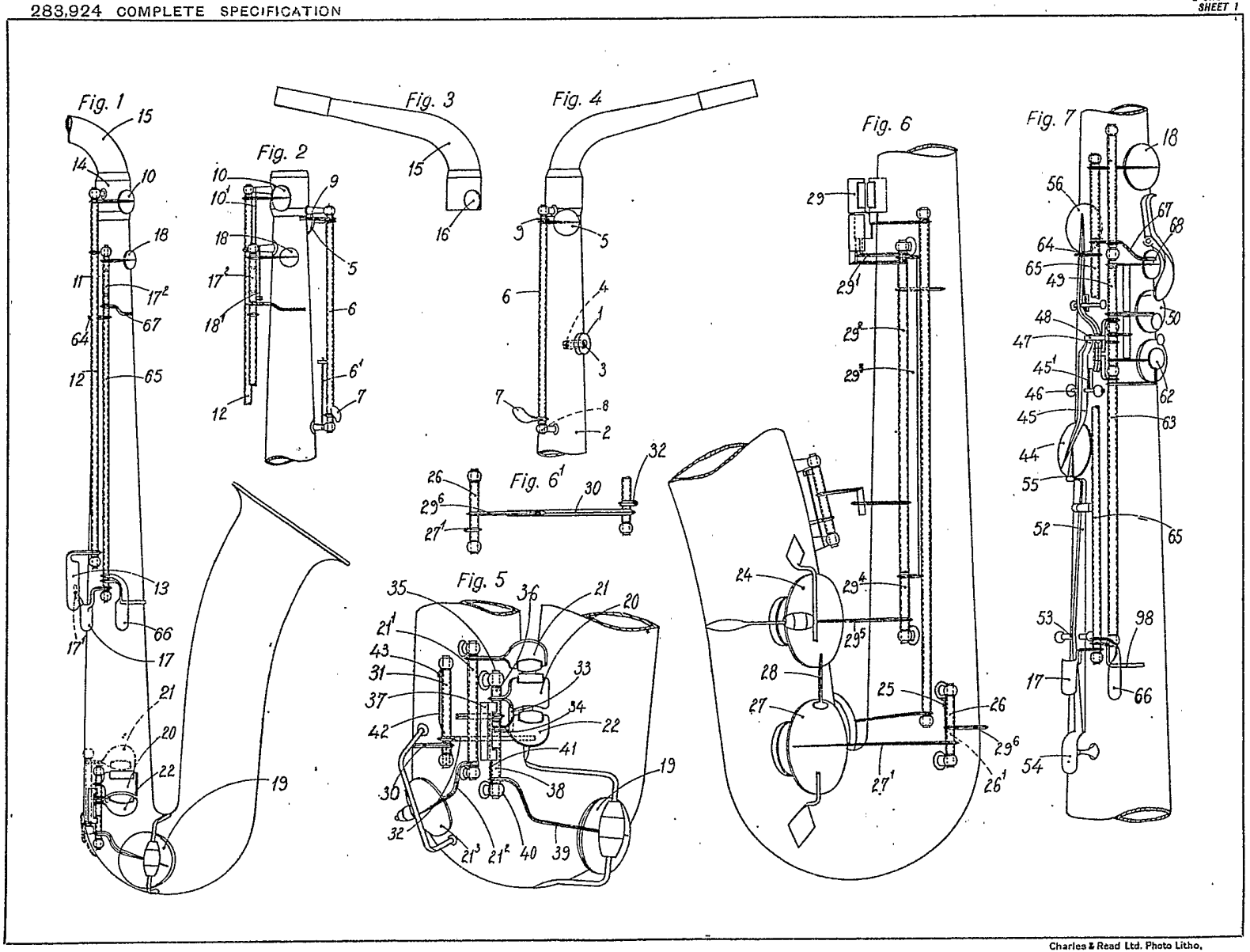

Charles & Read Ltd. Photo Litho.