March 13, 1928.

A. LOOMIS

1,662,195

WOOD WIND INSTRUMENT

Filed Nov. 2, 1925

5 Sheets-Sheet 4

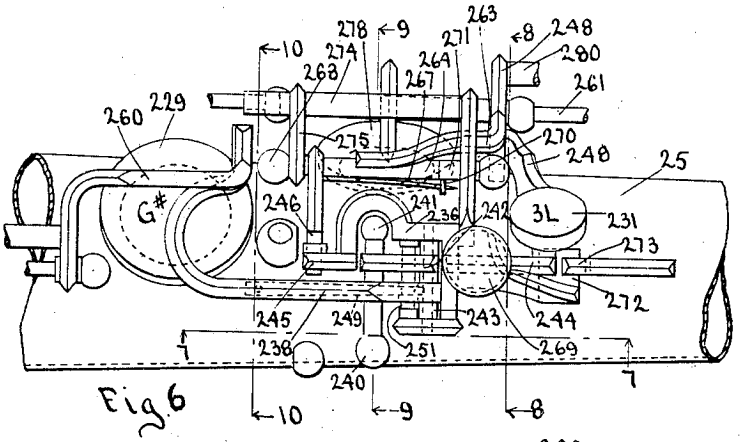

Fig. 6

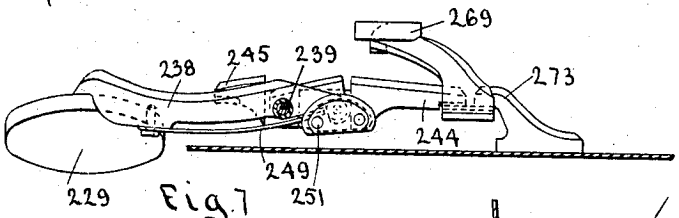

Fig. 7

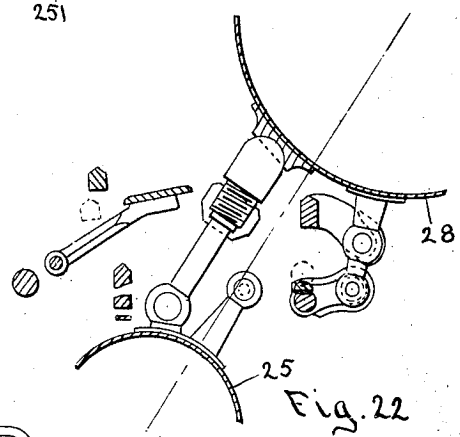

Fig. 22

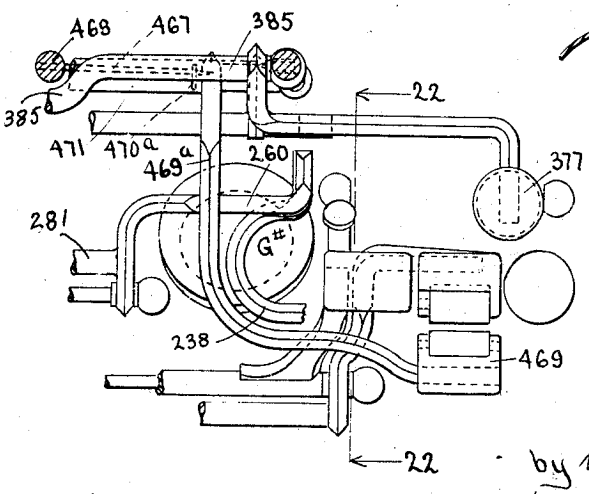

Fig. 21

INVENTOR
Allen Loomis

by Wright, Brown Quinby & Huey
Att'ys