Jan. 12, 1932. L. LEBLANC 1,840,456

SAXOPHONE

Filed Oct. 4, 1926 2 Sheets-Sheet 1

Fig. 1

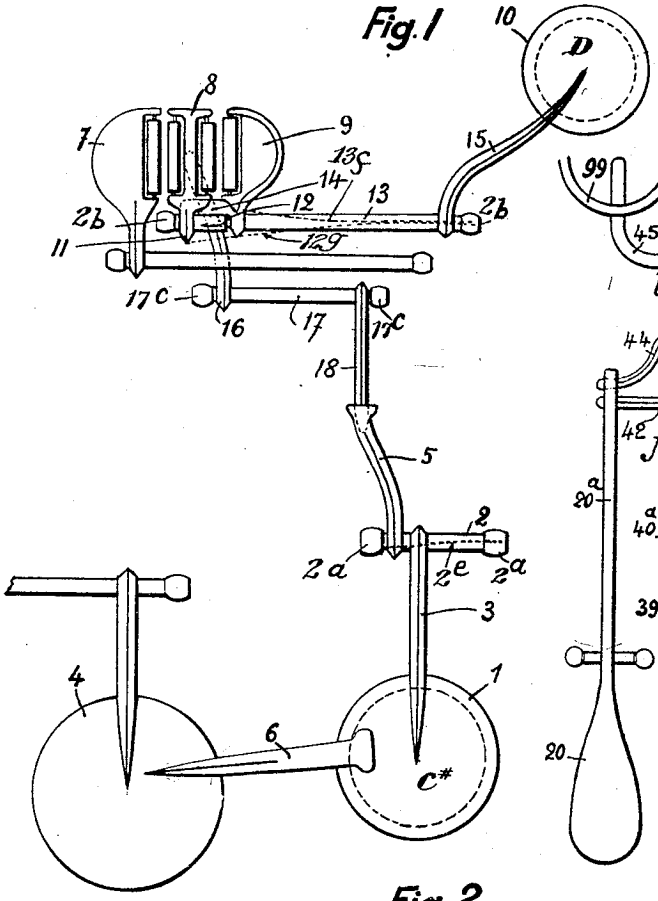


Fig. 4

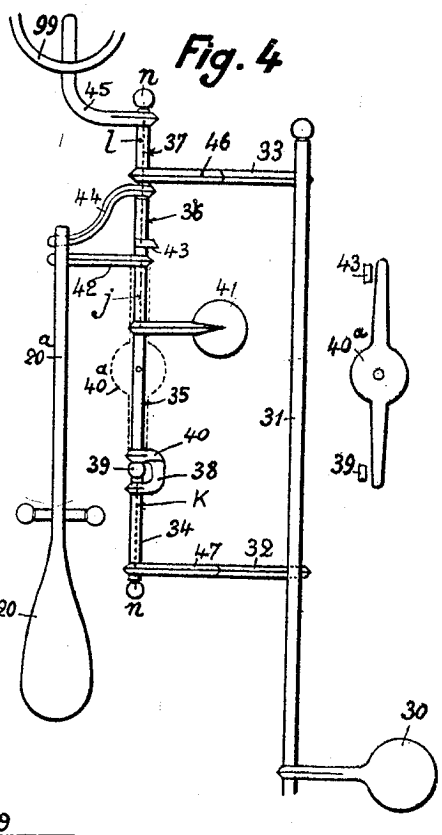


Fig. 2

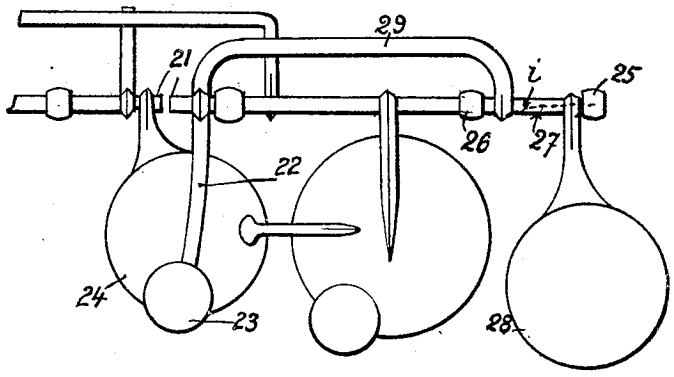


INVENTOR
L. LEBLANC,
BY Jno Morris
ATTY.