WIND INSTRUMENT OF THE REED TYPE

Filed Sept. 29, 1934 7 Sheets-Sheet 4

Fig. 7.

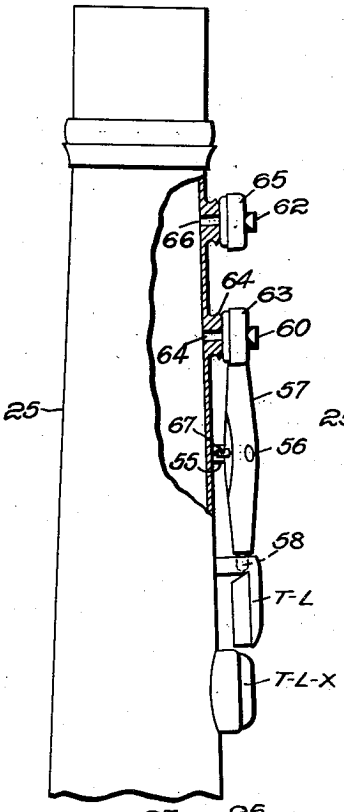

Fig. 8.

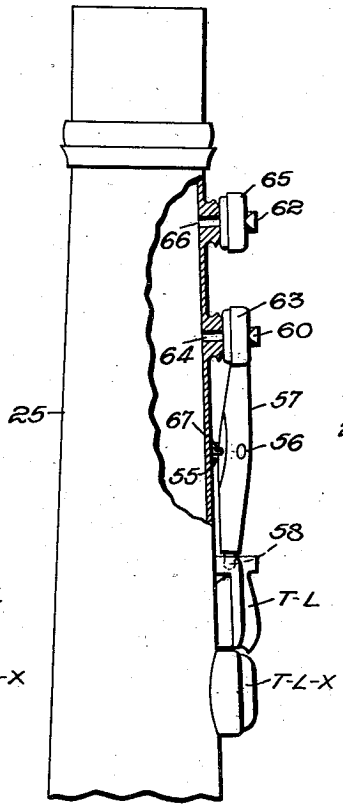

Fig. 9.

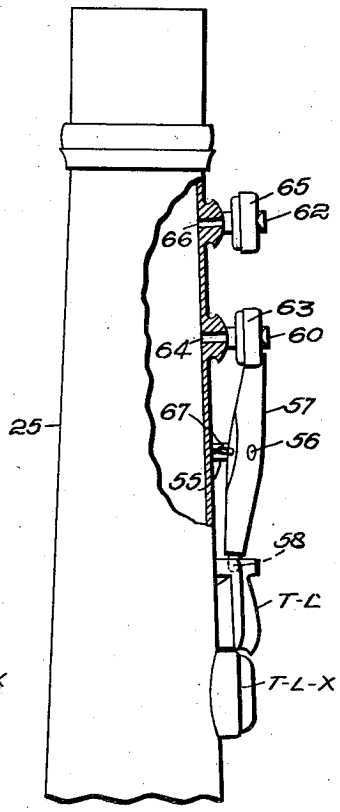

Fig. 10.

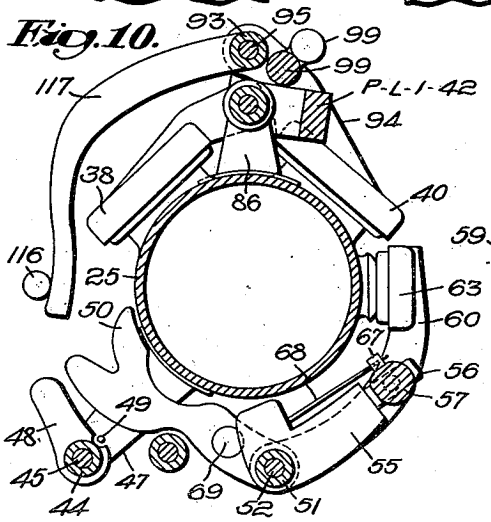

Fig. 11.

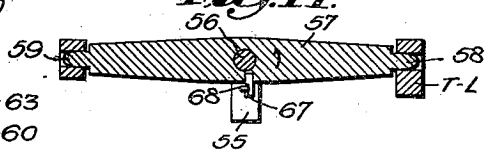

Inventor:
Edward V. Powell,
by Emery, Booth, Varney & Townsend.
Attys